REV	DESCRIPTION	DRAWN	DATE
		APPROVED	DATE

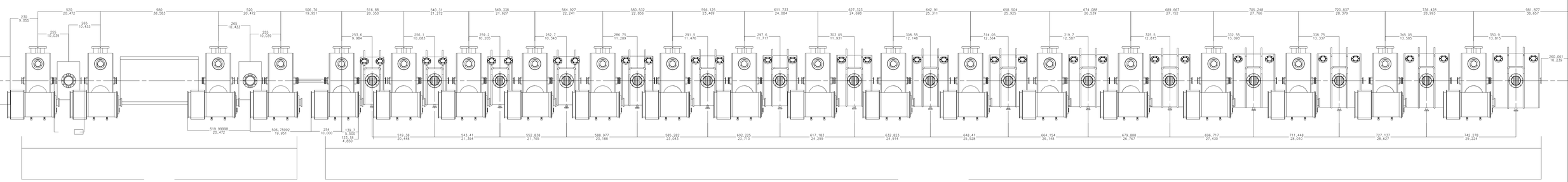

AS SEEN LOOKING FROM THE AISLE

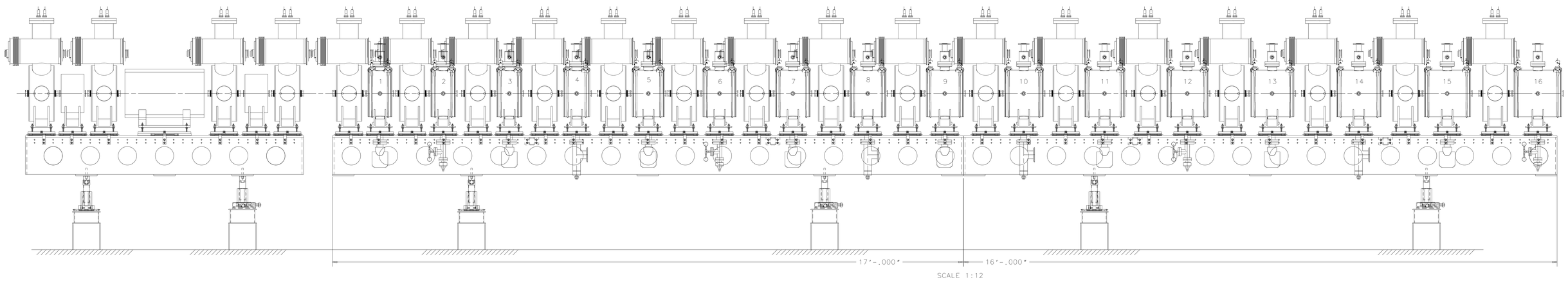

SCALE 1:12

LOOKING DOWNSTREAM

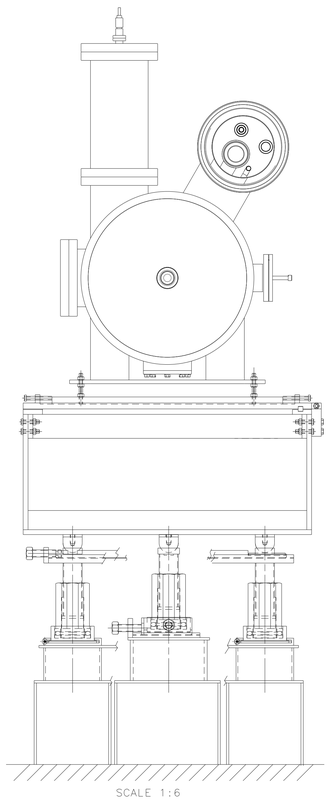

SCALE 1:6

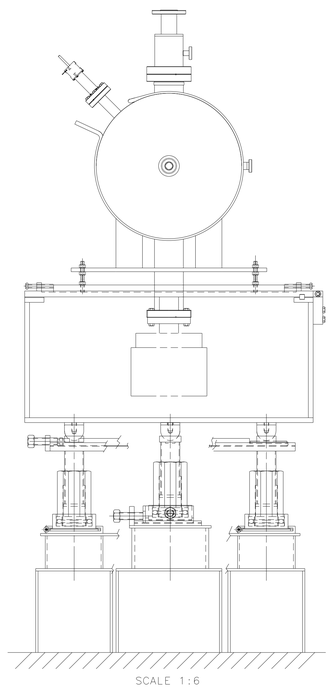

SCALE 1:6

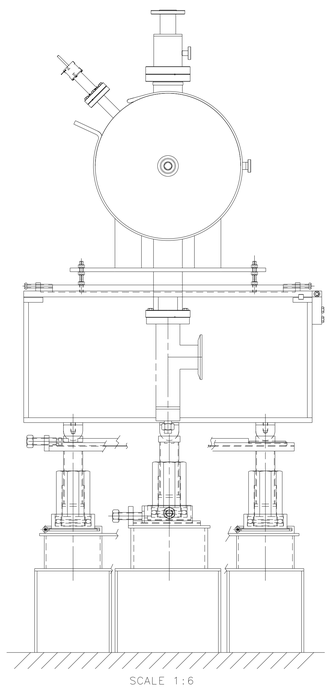

SCALE 1:6

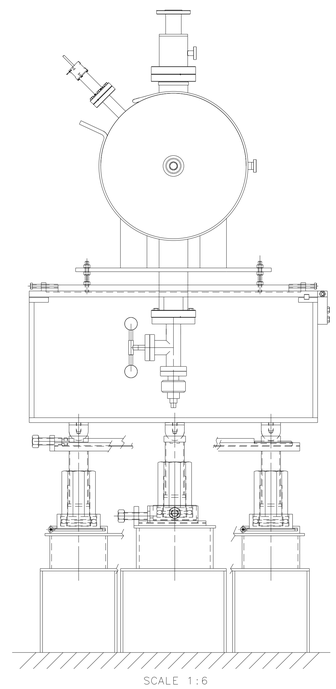

SCALE 1:6

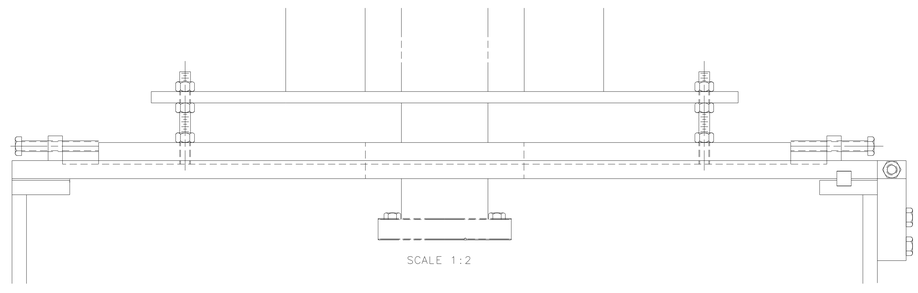

SCALE 1:2

UNLESS OTHERWISE SPECIFIED			ORIGINATOR		
			DRAWN		
±	±	±	CHECKED		
1. BREAK ALL SHARP EDGES MAX.			APPROVED		
2. DO NOT SCALE DRAWING. 3. DIMENSIONS BASED UPON			USED ON		
4. MAX. ALL MACH. SURFACES √			MATERIAL		
5. DRAWING UNITS:					

FERMI NATIONAL ACCELERATOR LABORATORY
UNITED STATES DEPARTMENT OF ENERGY

SCALE	DRAWING NUMBER	SHEET	REV
	. — —	1 OF 1	

CREATED WITH : GROUP: