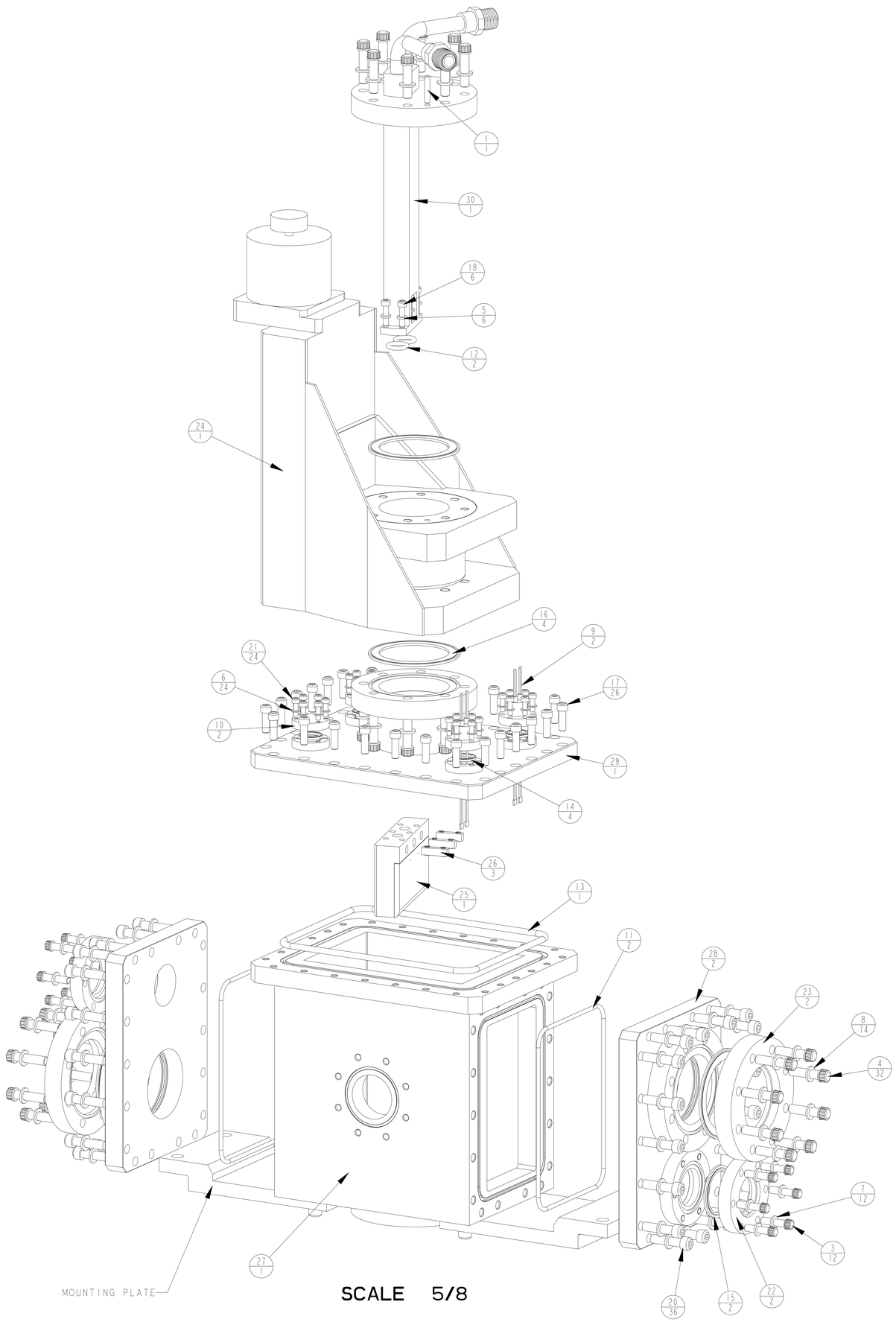


SCALE 5/8

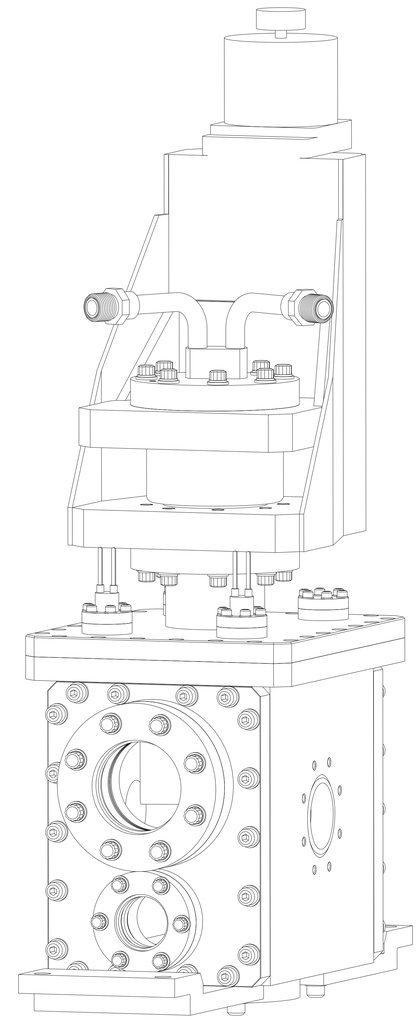

SCALE 5/8

NOTES:

1. FINISHED PART TO BE VACUUM TIGHT.
   LEAK RATE NOT TO EXCEED
   1 X 10^-8 TORR - LITERS PER SECOND HELIUM.

2. ULTRA-HIGH VACUUM CLEANING AND PACKING REQUIRED.

3. ASSEMBLE IN CLEAN ENVIRONMENT.
   AFTER ASSEMBLY, WRAP TO MAINTAIN CLEANLINESS.

| ITEM | PART NO | REQD | DESCRIPTION | MATERIAL |
|---|---|---|---|---|
| 30 | 25B413 | 1 | WATER MANIFOLD | - |
| 29 | 25B410 | 1 | VACUUM CHAMBER - TARGET ACTUATOR FLANGE WELDMENT | 304 SS |
| 28 | 25B408 | 2 | VIEW PORT FLANGE WELDMENT | 304 SS |
| 27 | 25B407 | 1 | VACUUM CHAMBER LOWER ASSEMBLY | - |
| 26 | 25B167 | 3 | 10-32 BARREL NUT | 304 SS |
| 25 | 25B166 | 1 | TARGET BRAZEMENT - FINAL MACHINING | MOLYBDENUM TZM |
| 24 | 25B100 | 1 | ACTUATOR, MODIFIED, EMT - 2.5-2 / BLOCK UP | - |
| 23 | - | 2 | VIEWPORT, 4.5" , GLASS, MDC P/N 450004 OR EQUIV. | - |
| 22 | - | 2 | VIEWPORT, 2.75" , GLASS, MDC P/N 450002 OR EQUIV. | - |
| 21 | - | 24 | SOCKET HEAD CAP SCREW, 8-32 x .5", SILVER PLATED | 300 SS |
| 20 | - | 36 | SOCKET HEAD CAP SCREW, 5/16-18 x 1.25", SILVER PLATED | 316 SS |
| 19 | - | 6 | SOCKET HEAD CAP SCREW, 5/16-18 x 1", SILVER PLATED | 316 SS |
| 18 | - | 6 | SOCKET HEAD CAP SCREW, 10-32 x .75", SILVER PLATED | 316 SS |
| 17 | - | 26 | SOCKET HEAD CAP SCREW, 1/4-20 x .75", SILVER PLATED | 316 SS |
| 16 | - | 4 | OFE COPPER GASKET, 4-1/2", MDC P/N 191009 OR EQUIV. | OFE Copper |
| 15 | - | 2 | OFE COPPER GASKET, 2-3/4", MDC P/N 191004 OR EQUIV. | OFE Copper |
| 14 | - | 4 | OFE COPPER GASKET, 1-1/3", MDC P/N 191000 OR EQUIV. | OFE Copper |
| 13 | - | 1 | O-RING, 3/16"x 8-1/4" I.D., PARKER P/N 2-370 OR EQUIV. | VITON |
| 12 | - | 2 | O-RING, 1/8" x 9/16" I.D., PARKER P/N 2-207 OR EQUIV. | VITON |
| 11 | - | 2 | O-RING, 1/8" x 6-3/4" I.D., PARKER P/N 2-261 OR EQUIV. | VITON |
| 10 | - | 2 | MINI-CONFLAT FLANGE, MDC P/N 110000 OR EQUIV. | 304 SS |
| 9 | - | 2 | K-TYPE THERMOCOUPLE, CERAMASEAL P/N 8118-01-CF OR EQUIV. | - |
| 8 | - | 74 | FLAT WASHER, 5/16", MCMASTER-CARR #98017A690 OR EQUIV. | SS 18-8 |
| 7 | - | 12 | FLAT WASHER, 1/4", MCMASTER-CARR #90945A761 OR EQUIV. | SS |
| 6 | - | 24 | FLAT WASHER, #8, MCMASTER-CARR #90945A726 OR EQUIV. | SS |
| 5 | - | 6 | FLAT WASHER, #10, MCMASTER-CARR #90945A741 OR EQUIV. | SS |
| 4 | - | 32 | 12-PT BOLT, 5/16-24 x 1.25", MDC P/N 190058 OR EQUIV. | 300 SS |
| 3 | - | 12 | 12-PT BOLT, 1/4-28 x .875", MDC P/N 190057 OR EQUIV. | 300 SS |
| 2 | - | 4 | .250 x 1" DOWEL PIN | 316 SS |
| 1 | - | 1 | .1875 x 1" DOWEL PIN | 316 SS |

| REV | DWG | CHK | ZONE | DATE | CHANGES |
|---|---|---|---|---|---|
| A | AD | | | 5/01 | INITIAL RELEASE |

UNLESS OTHERWISE SPECIFIED
PROJECTION:
TOLERANCES: X.X ± 0.1 FRAC. ± 1/64" X.XX ± 0.03 Angles ± 1.0° X.XXX ± 0.010 FINISH 125
DO NOT SCALE PRINT
THREADS ARE CLASS 2
CHAMFER ENDS OF ALL SCREW THREADS 30°
CUT ROUND, 1.5 THREAD RELIEF ON MACHINED THREADS
BREAK EDGES .016 MAX. ON MACHINED WORK
REMOVE BURRS, WELD SPLATTER & LOOSE SCALE
IN ACCORDANCE WITH ASME Y14.5M & B46.1

SHOP ORDERS
ACCT NO. / NO. REQD / DATE
BEL NO. / DATE
TO / REQD
SURFACE TREATMT -
IDENT METHOD TAG
PROJECT NUMBER no
PROJECT NAME -
DWG BY Allan DeMello DATE 17-May-01
CHK BY D. Oshatz DATE
APR BY D. Oshatz DATE

ERNEST ORLANDO LAWRENCE BERKELEY NATIONAL LABORATORY
UNIVERSITY OF CALIFORNIA - BERKELEY

SNS - FES MEBT
CHOPPER TARGET
TARGET CHAMBER, COMPLETE ASSEMBLY

MICROFILMED: | DWG. TYPE ASSEM | SHOWN ON - | SCALE: 5/8 | DO NOT SCALE PRINT
SHEET 1 OF 2
PATENT CLEAR: | DESIGN ACCT. NO. - | CATEGORY CODE FE3312 | DWG. NO. 25B4006 | SIZE A | REV.

DWG. NO. 25B4006 A 1
SIZE REV SHT

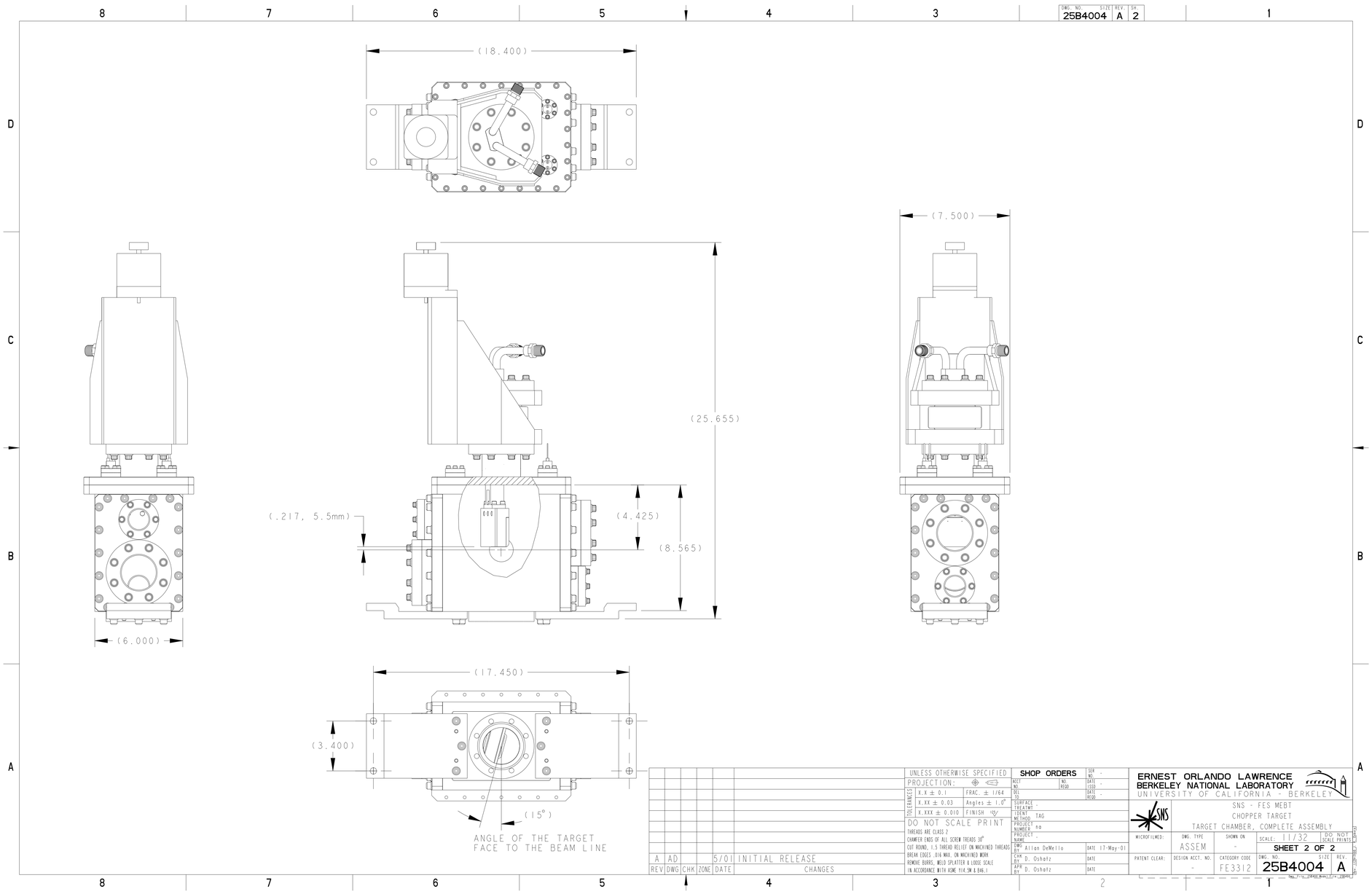


| REV | DWG | CHK | ZONE | DATE | CHANGES |
|---|---|---|---|---|---|
| A | AD | | | 5/01 | INITIAL RELEASE |

UNLESS OTHERWISE SPECIFIED
PROJECTION:
TOLERANCES: X.X ± 0.1 | FRAC. ± 1/64 | X.XX ± 0.03 | Angles ± 1.0° | X.XXX ± 0.010 | FINISH 125
DO NOT SCALE PRINT
THREADS ARE CLASS 2
CHAMFER ENDS OF ALL SCREW THREADS 30°
CUT ROUND, 1.5 THREAD RELIEF ON MACHINED THREADS
BREAK EDGES .016 MAX. ON MACHINED WORK
REMOVE BURRS, WELD SPLATTER & LOOSE SCALE
IN ACCORDANCE WITH ASME Y14.5M & B46.1

SHOP ORDERS
ACCT NO. | NO. REQD | SER NO. -
DEL NO. | DATE ISSD -
SURFACE TREATMT -
IDENT METHOD TAG
PROJECT NUMBER no
PROJECT NAME -
DWG BY Allan DeMello | DATE 17-May-01
CHK BY D. Oshatz | DATE
APR BY D. Oshatz | DATE

ERNEST ORLANDO LAWRENCE
BERKELEY NATIONAL LABORATORY
UNIVERSITY OF CALIFORNIA - BERKELEY

SNS - FES MEBT
CHOPPER TARGET
TARGET CHAMBER, COMPLETE ASSEMBLY

MICROFILMED: | DWG. TYPE ASSEM | SHOWN ON - | SCALE: 1 1/32 | DO NOT SCALE PRINTS
SHEET 2 OF 2
PATENT CLEAR: | DESIGN ACCT. NO. - | CATEGORY CODE FE3312 | DWG. NO. 25B4004 | SIZE | REV. A

DWG. NO. 25B4004 | SIZE A | REV. 2 | SH. 2

103000000-M8E-8100-A269-000