REV	DESCRIPTION	DRAWN / APPROVED	DATE / DATE
	ER NO. 8467		

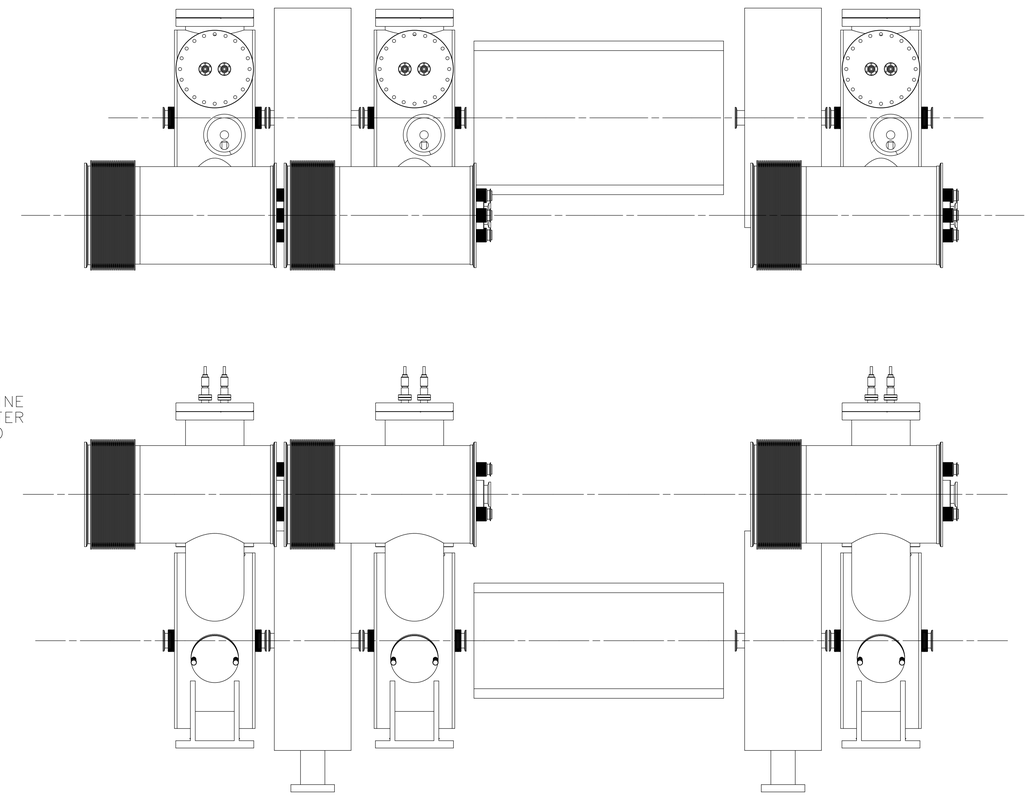

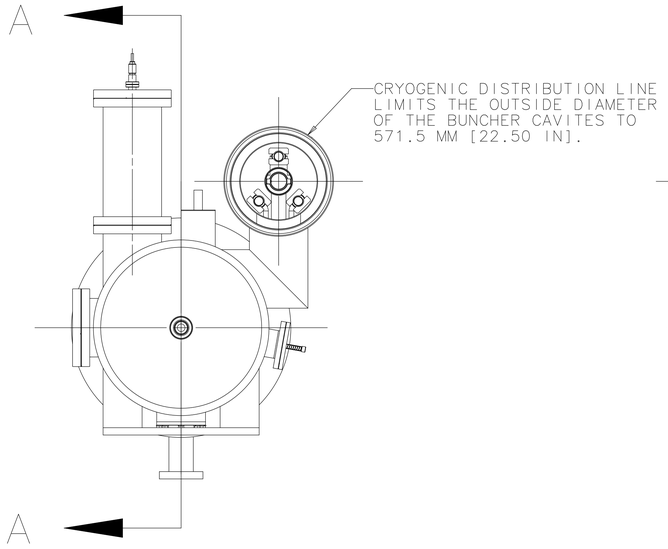

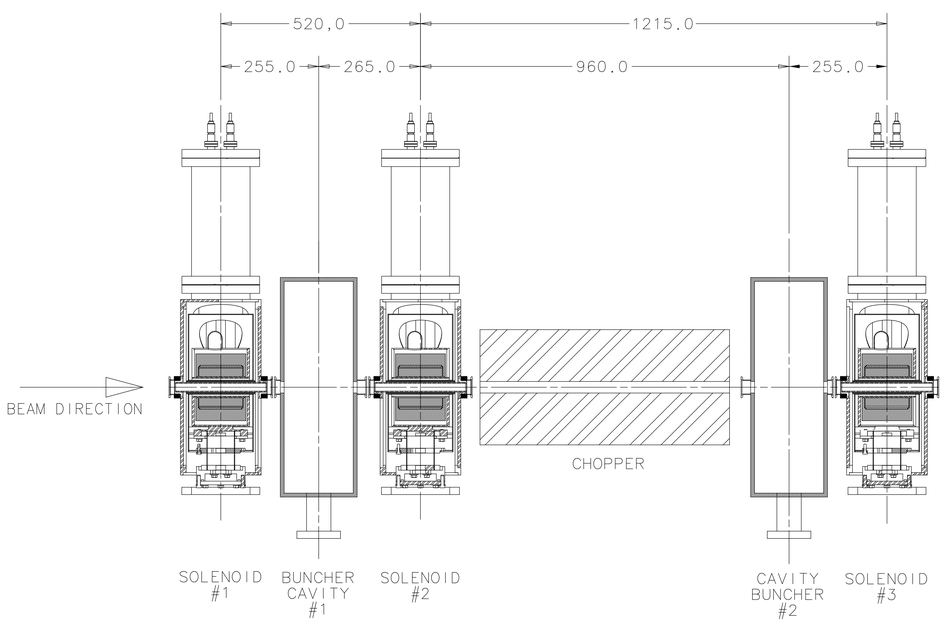

SECTION: A–A

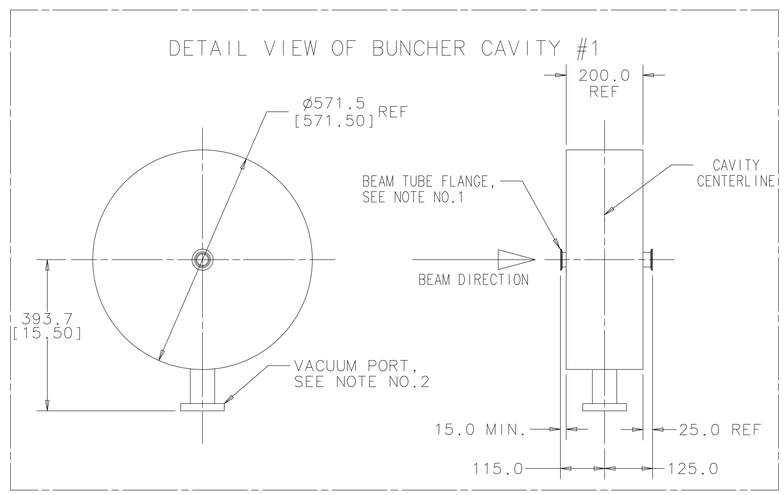

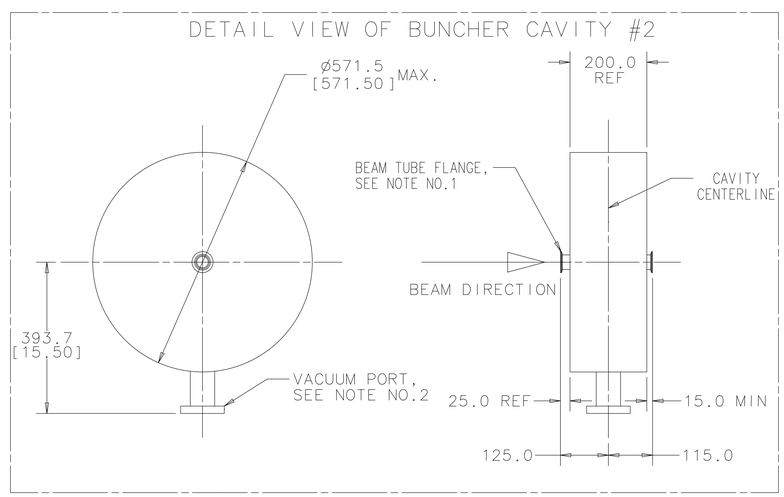

NOTES:

1. BEAM TUBE FLANGE SPECIFICATION: NOR-CAL NW 40 OR EQUIVALENT; MUST BE COMPATIBLE WITH EVAC ALUMINUM SEALS.
2. VACUUM PORT: 2.5" O.D. STAINLESS STEEL TUBE; VACUUM FLANGE: 4.5" CONFLAT, ROTATABLE, CLEARANCE HOLES, MDC PART NUMBER 100021 OR EQUIVALENT.
3. CAVITY MOUNTING FEATURES TO BE SPECIFIED BY VENDOR, APPROVED BY FNAL.

UNLESS OTHERWISE SPECIFIED			ORIGINATOR	T.PAGE	10-JUL-2006
.X	.XX	ANGLES	DRAWN	S.MEREDITH	10-JUL-2006
± .5	± .13	± .5°	CHECKED		
1. BREAK ALL SHARP EDGES MAX.			APPROVED		
2. DO NOT SCALE DRAWING. 3. DIMENSIONS BASED UPON ASME Y14.5M-1994 4. MAX. ALL MACH. SURFACES			USED ON		
5. DRAWING UNITS: U.S. INCH			MATERIAL		

FERMI NATIONAL ACCELERATOR LABORATORY
UNITED STATES DEPARTMENT OF ENERGY

HINS – FRONT END
MEBT SECTION
BUNCHER CAVITY DESIGN ENVOLOPES

SCALE	DRAWING NUMBER	SHEET	REV
1:6	5520.000-ME-441709	1 OF 1	

CREATED WITH : Ideas12NXSeries GROUP: TD/DDCIS-DESIGN-COMPUTING