REV	DESCRIPTION	DRAWN / APPROVED	DATE / DATE
	ER #XXXX; NEW RELEASE	D.ARNOLD	29-AUG-2008

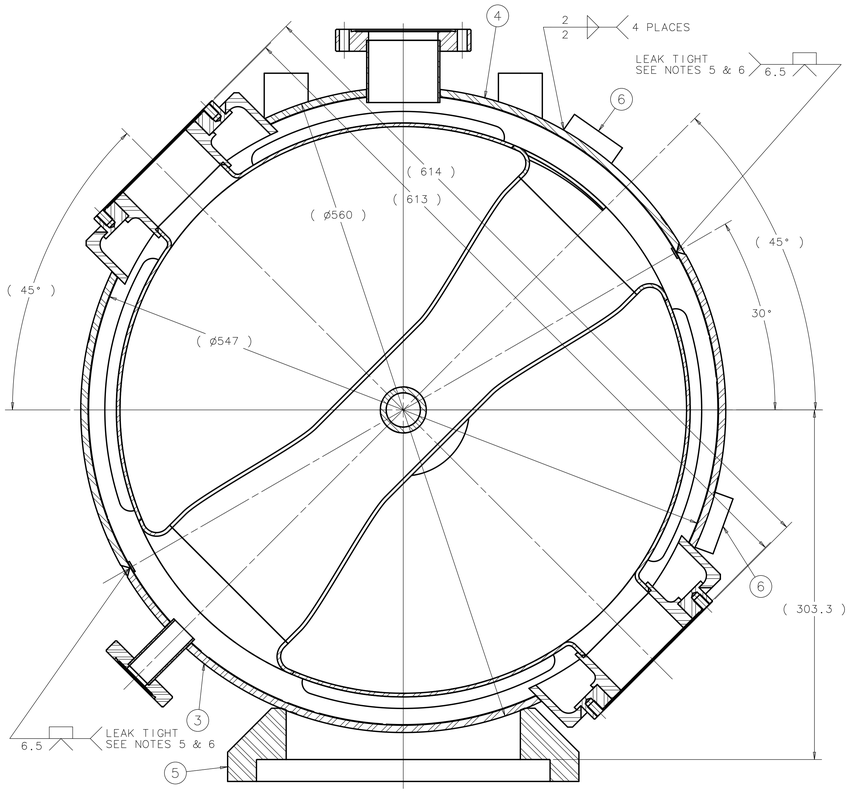

SECTION A-A
SCALE = 1:2

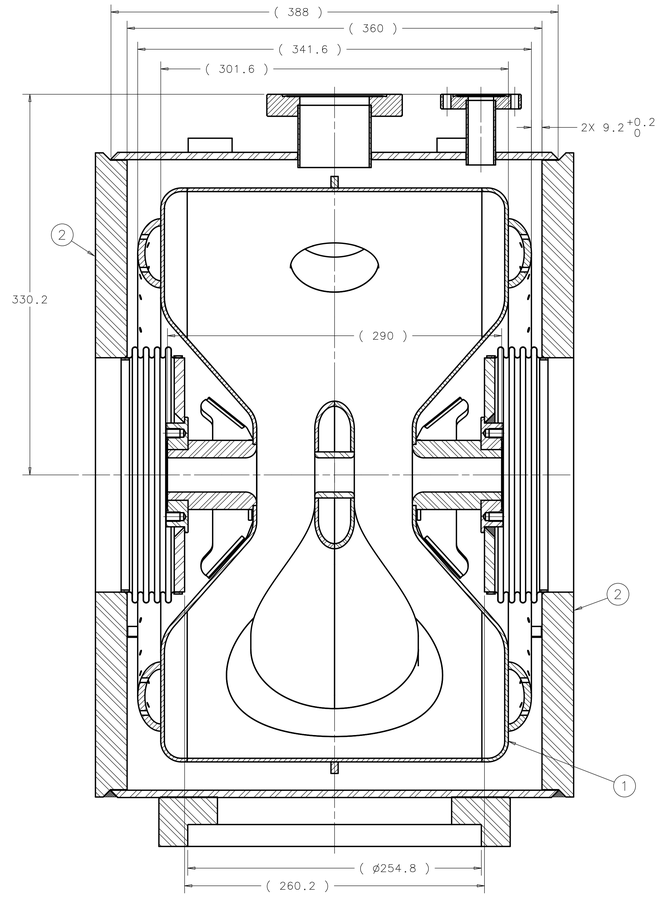

SECTION B-B
SCALE = 1:2

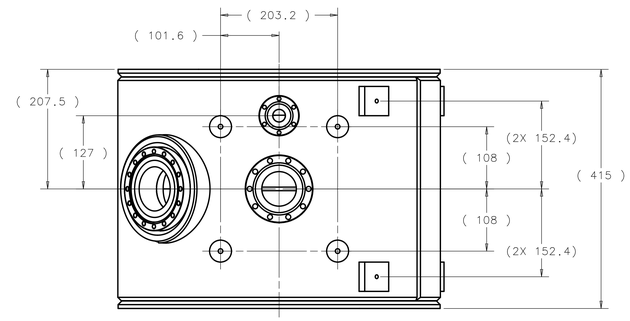

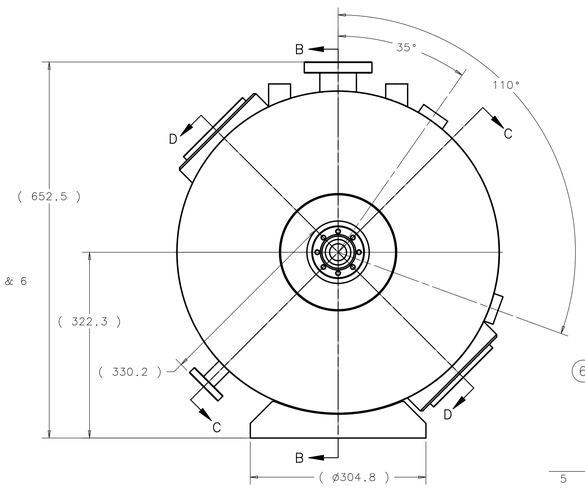

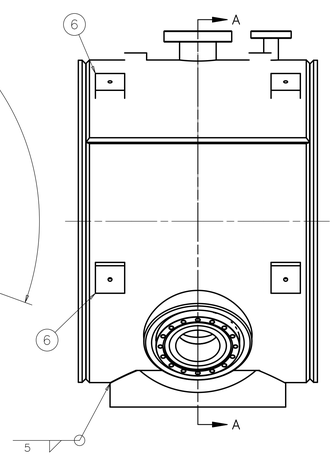

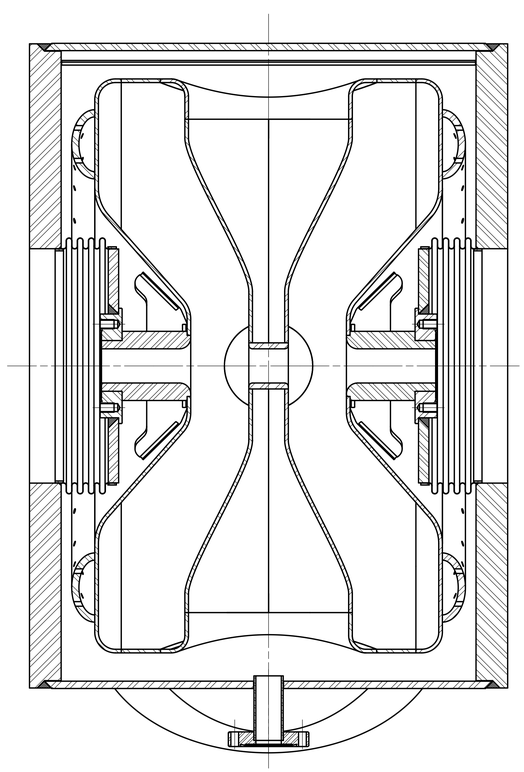

SECTION C-C
SCALE = 1:2

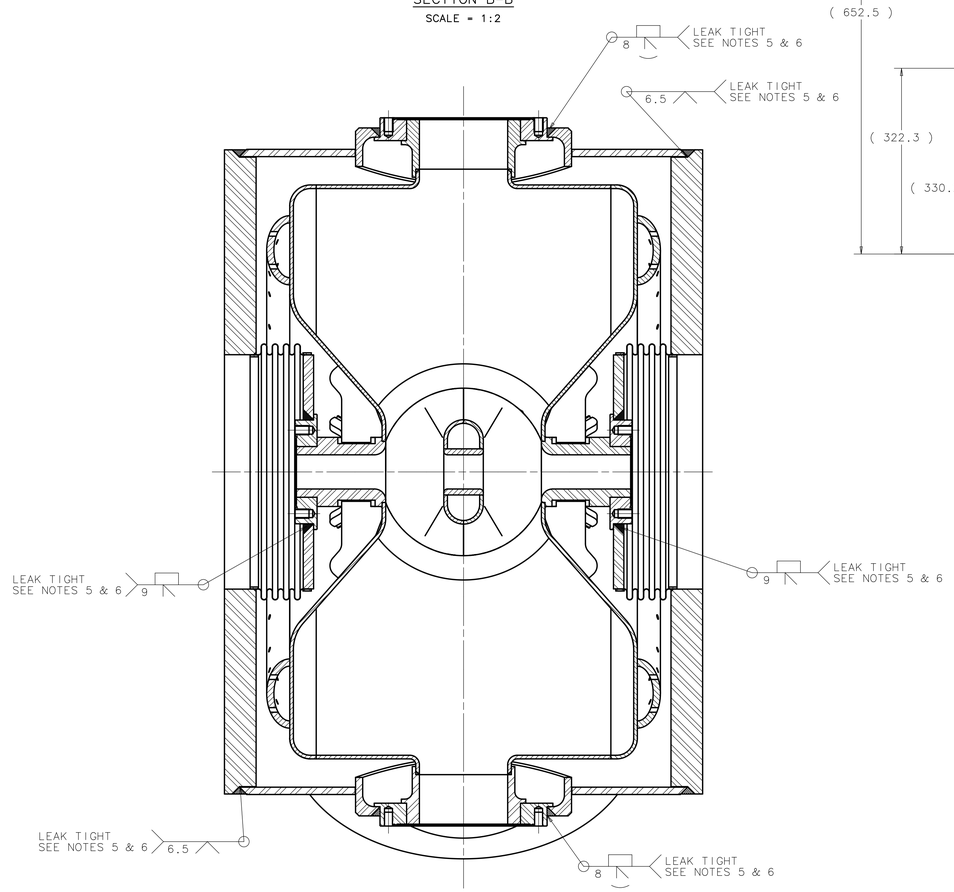

SECTION D-D
SCALE = 1:2

FOR REFERENCE ONLY
DO NOT USE FOR PRODUCTION
AUGUST 29, 2008

NOTES (UNLESS OTHERWISE SPECIFIED):

1.) EST. WT. = 150 Kg. [330 LBS.]
2.) DIMENSIONS APPLY AFTER ALL FINISHING.
3.) DO NOT DAMAGE SEALING SURFACES AND KNIFE EDGES.
4.) DO NOT DAMAGE INTERNAL SURFACES AND OPENINGS.
5.) ALL FOUR(4) PORTS ARE TO BE BLANKED OFF.
6.) REFERENCE FERMILAB SPECIFICATION ES-371029.
7.) LEAK CHECK PER FERMILAB SPECIFICATION ES-107240.
8.) REFERENCE DRAWING NUMBER 5520-MC-459047 FOR THE COMPLETE ASSEMBLY SCHEMATIC.

ITEM	PART NO.	DESCRIPTION OR SIZE	QTY.
6	MA-458973	FIDUCIAL HOLDER	4
5	ME-457751	CRADLE	1
4	MD-458844	SHELL OUTPUT HALF ASSEMBLY	1
3	MD-458846	SHELL INPUT HALF ASSEMBLY	1
2	MD-458829	END WALL ASSEMBLY	2
1	ME-458827	SSR1 SINGLE SPOKE RESONATOR	1

PARTS LIST

UNLESS OTHERWISE SPECIFIED			ORIGINATOR	L.RISTORI	08-JUL-2008
X	0.X	ANGLES	DRAWN	D.ARNOLD	15-JUL-2008
± 0.5	± 0.2	±0.5°	CHECKED		
			APPROVED		

1. BREAK ALL SHARP EDGES .01 - MAX.
2. DO NOT SCALE DRAWING.
3. DIMENSIONS BASED UPON ASME Y14.5M-1994
4. MAX. ALL MACH. SURFACES 32
5. DRAWING UNITS: MILLIMETERS

USED ON: SSR1 PROTOTYPE TUNER ASSEMBLY

MATERIAL: SEE PARTS LIST

FERMI NATIONAL ACCELERATOR LABORATORY
UNITED STATES DEPARTMENT OF ENERGY

HINS - FRONT END
SSR1 PROTOTYPE TUNER ASSEMBLY
HELIUM VESSEL ASSEMBLY WELDMENT

SCALE	DRAWING NUMBER	SHEET	REV
1:4 & NOTED	5520.000-ME-458850	1 OF 1	

CREATED WITH : Ideas12NXSeries GROUP: TD/DDCIS-DESIGN-COMPUTING

Created: 14:37:15 on 21-10-08 (D-M-Y) By: arnold State: 1-INITIAL