REV	DESCRIPTION	DRAWN / APPROVED	DATE
--	NEW RELEASE E.R.# 8271	L. SIMMONS	06-FEB-2006
A	CHANGED DIM. - NOW: 488.0 WAS: 488.8 CHANGED DIM. - NOW: 234.7 WAS: 235.5 CHANGED DIM. - NOW: 259.1 WAS: 219.4 CHANGED DIM. - NOW: 216.6 WAS: 217.4 CHANGED DIM. - NOW: 67.1 WAS: 26.6 CHANGED DIA. - NOW: Ø384.0 WAS: Ø385.6 CHANGED DIA. - NOW: Ø364.0 WAS: Ø365.6 CHANGED DIM. - NOW: 50.5 WAS: 70.5 ADDED "USED ON" DRAWING NUMBER. MODIFIED NOTE 3 TO INCLUDE FERMI SPEC. NUMBER. CHANGED DRAWING TITLE - WAS: PROTON DRIVER - FRONT END UPDATED DRAWING ECO #8311	L. SIMMONS T. NICOL	31-MAR-2006 11-APR-2006

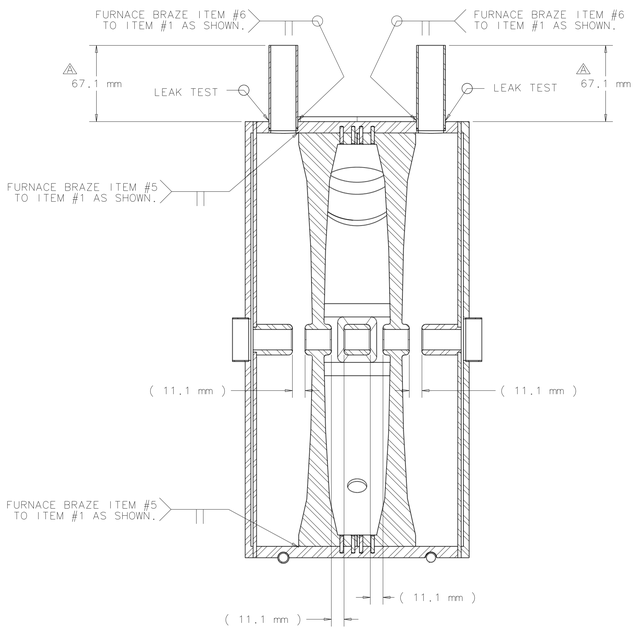

SECTION A-A
VIEW ROTATED 45°
SCALE 1:2

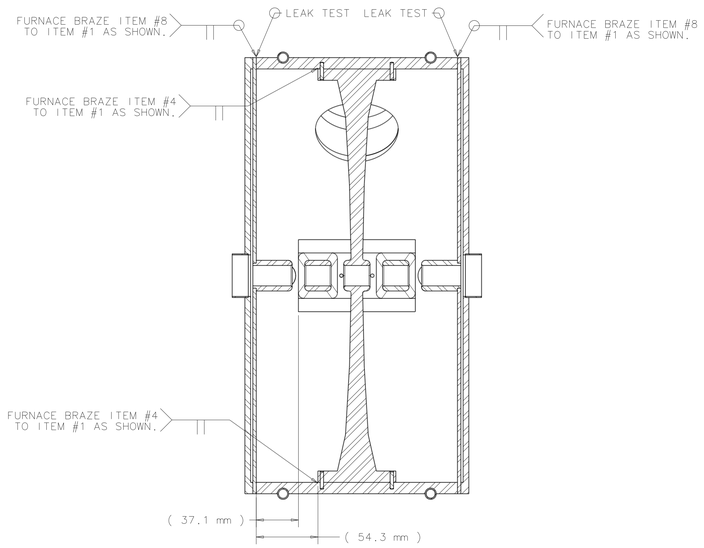

SECTION D-D
VIEW ROTATED 45°
SCALE 1:2

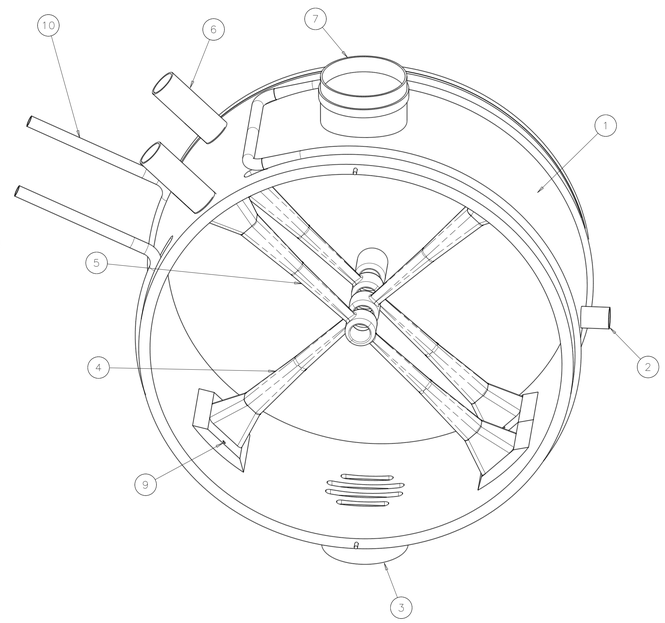

NOTE
VIEW SHOWN WITH ITEM #8 REMOVED.

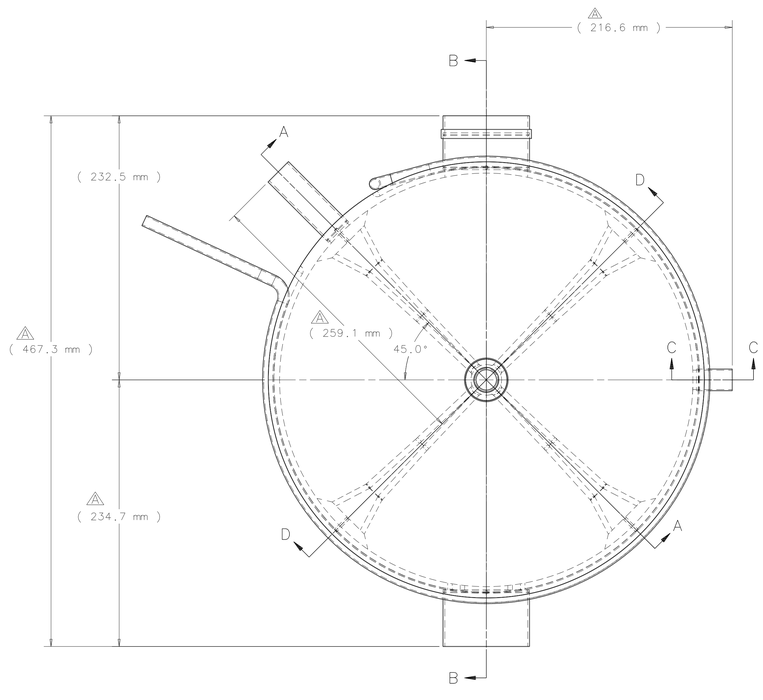

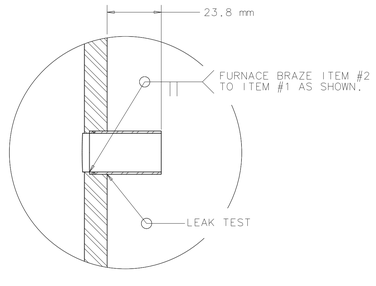

SECTION C-C
SCALE 1:1

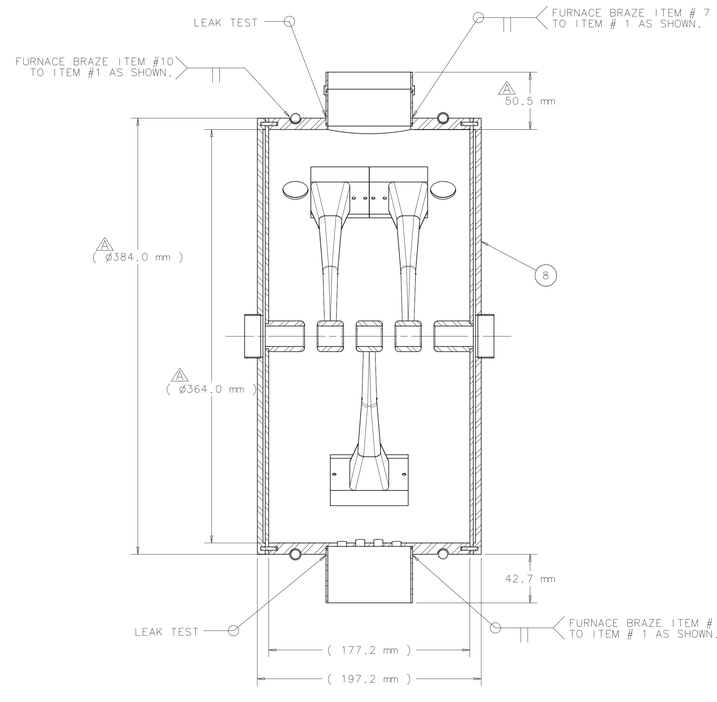

SECTION B-B
SCALE 1:2

NOTES:

1. LEAK TEST PER FERMILAB SPECIFICATION ES-10724
2. DIMENSIONS APPLY AFTER ALL FINISHING.
3. PART TO BE DEBURRED AND CLEANED PER FERMI SPE

NOTICE: IMAGE OBTAINED FROM FERMILAB WEB SITE
This information is provided for REFERENCE use only. Not for MANUFACTURE, or DESIGN INFORMATION. All information contained in this document represents work sponsored by an agency of the U.S. Government. Neither the U.S. Government nor any agency thereof, nor Universities Research Association, Inc., nor any of their employees or officers, makes any warranty, express or implied, or assumes any legal liability or responsibility for the accuracy, completeness, or usefulness of any information, apparatus, product or process disclosed, or represents that its use would not infringe privately owned rights.

10	5520-MD-440378	B0744 COOLING TUBE	1
9	McMaster-Carr PRT NO 93600A115	DOWEL PIN Ø3mm X 14mm STNLS. STL	12
8	5520-MD-440375	B0744 END WALL ASSEMBLY	2
7	5520-MB-440405	B0744 RF PORT TUBE ASSEMBLY	1
6	5520-MA-440387	B0744 TUNER PORT TUBE	2
5	5520-MD-440391	B0744 SPOKE - A	2
4	5520-MD-440392	B0744 SPOKE - B	1
3	5520-MB-440388	B0744 VACUUM PORT TUBE	1
2	5520-MA-440383	B0744 PROBE PORT TUBE	1
1	5520-MD-440379	B0744 CYLINDER	1

UNLESS OTHERWISE SPECIFIED			ORIGINATOR	L.RISTORI	21-NOV-2005
.X	.XX	ANGLES	DRAWN	L.SIMMONS	03-FEB-2006
± 0.1MM	±	± .5°	CHECKED	T.NICOL	16-FEB-2006
			APPROVED	T.NICOL	16-FEB-2006

1. BREAK ALL SHARP EDGES 0.01MM MAX.
2. DO NOT SCALE DRAWING.
3. DIMENSIONS BASED UPON ASME Y14.5M-1994.
4. MAX. ALL MACH. SURFACES √
5. DRAWING UNITS:METRIC

USED ON: 5520-ME-440373

MATERIAL:

FERMI NATIONAL ACCELERATOR LABORATORY
UNITED STATES DEPARTMENT OF ENERGY

HINS - FRONT END ROOM TEMP CH CAVITY B0744 CYLINDER BRAZING ASSEMBLY

SCALE	DRAWING NUMBER	SHEET	REV
1:2	5520.000-ME-440374	1 OF 1	A

CREATED WITH : Ideas11NXSeries GROUP: TD/DDCIS-DESIGN-COMPUTING