REV	DESCRIPTION	DRAWN	DATE
		APPROVED	DATE
--	NEW RELEASE E.R.# 8271	L. SIMMONS	06-FEB-2006
A	O.D. WAS:ø385.6 NOW:ø384.0 CHANGED DRAWING TITLE - WAS: PROTON DRIVER - FRONT END UPDATED DRAWING ECO #8311	L. SIMMONS	31-MAR-2006
		T. NICOL	06-APR-2006

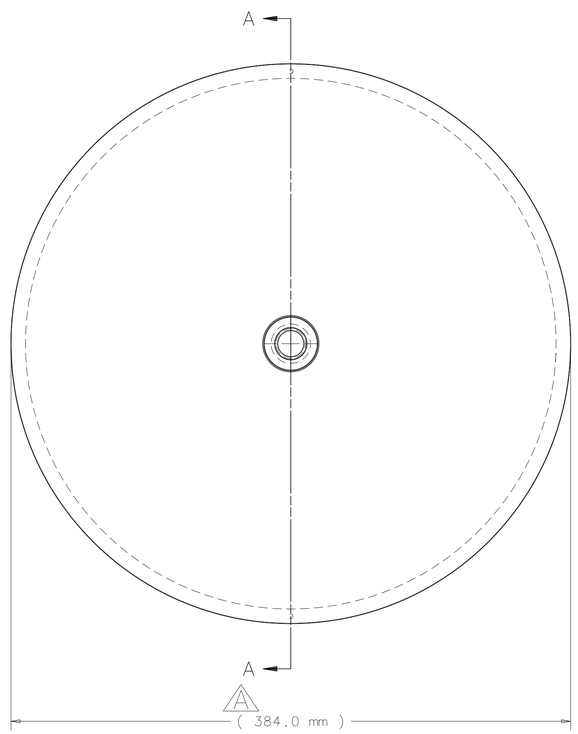

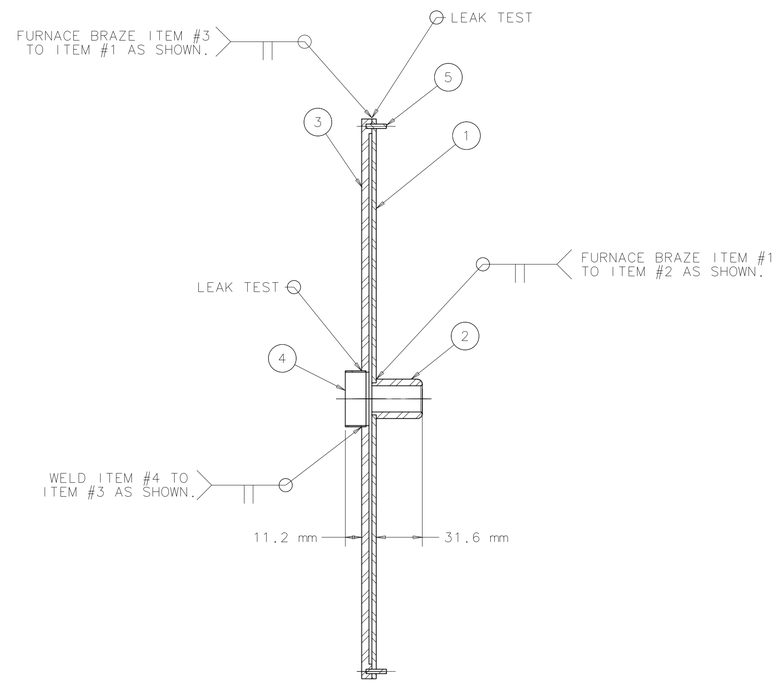

SECTION A-A
SCALE 1:2

NOTES:

1. CLEAN AND PACKAGE PER FERMILAB SPECIFICATION ES-107222 & ES-107223.
2. LEAK TEST PER FERMILAB SPECIFICATION ES-107240
3. DIMENSIONS APPLY AFTER ALL FINISHING.

5	McMaster-Carr PRT NO 93600A115	DOWEL PIN ø3mm X 14mm STNLS. STL	2
4	5520-MA-440390	B0744 BEAMLINE TUBE	1
3	5520-MD-440382	B0744 EXTERNAL END WALL	1
2	5520-MB-440381	B0744 END WALL DRIFT TUBE	1
1	5520-MD-440380	B0744 END WALL	1

UNLESS OTHERWISE SPECIFIED			ORIGINATOR	L.RISTORI	21-NOV-2005
.X		ANGLES	DRAWN	L.SIMMONS	03-FEB-2006
± 0.1MM	±	± .5	CHECKED	T.NICOL	16-FEB-2006
1. BREAK ALL SHARP EDGES 5MM MAX. 2. DO NOT SCALE DRAWING. 3. DIMENSIONS BASED UPON ASME Y14.5M-1994 4. MAX. ALL MACH. SURFACES ✓ 5. DRAWING UNITS:METRIC			APPROVED	T.NICOL	16-FEB-2006
			USED ON	5520-ME-440374	
			MATERIAL	S30400 & UNS C10100	

FERMI NATIONAL ACCELERATOR LABORATORY
UNITED STATES DEPARTMENT OF ENERGY

HINS - FRONT END
ROOM TEMP CH CAVITY
B0744 END WALL ASSEMBLY

SCALE	DRAWING NUMBER	SHEET	REV
1:2	5520.000-MD-440375	1 OF 1	A

CREATED WITH : Ideas11NXSeries GROUP: TD/DDCIS-DESIGN-COMPUTING

NOTICE: IMAGE OBTAINED FROM FERMILAB WEB SITE

This information is provided for REFERENCE use only. Not for MANUFACTURE, or DESIGN INFORMATION. All information contained in this document represents work sponsored by an agency of the U.S. Government. Neither the U.S. Government nor any agency thereof, nor Universities Research Association, Inc., nor any of their employees or officers, makes any warranty, express or implied, or assumes any legal liability or responsibility for the accuracy, completeness, or usefulness of any information, apparatus, product or process disclosed, or represents that its use would not infringe privately owned rights.