REV	DESCRIPTION	DRAWN	DATE
		APPROVED	DATE
--	NEW RELEASE E.R.# 8271	L. SIMMONS	06-FEB-2006
A	CHANGED DRAWING TITLE - WAS: PROTON DRIVER - FRONT END ECO #8311	L. SIMMONS	31-MAR-2006
		T. NICOL	06-APR-2006

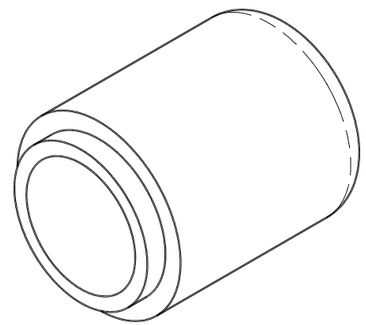

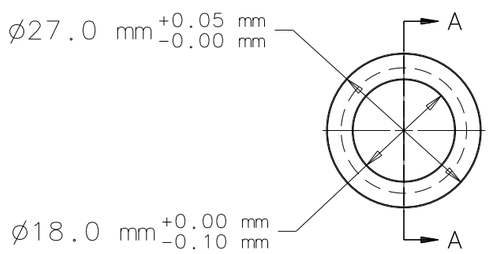

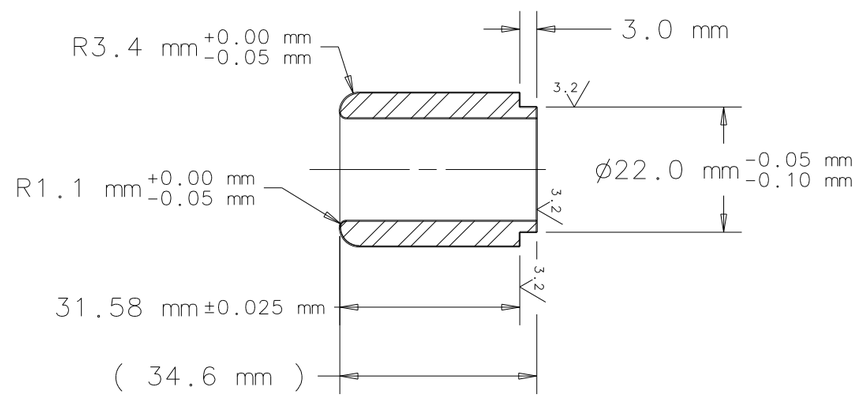

SECTION A-A
SCALE 1:1

NOTE:

1. CLEAN AND PACKAGE PER FERMILAB SPECIFICATION ES-107223.

NOTICE: IMAGE OBTAINED FROM FERMILAB WEB SITE

This information is provided for REFERENCE use only. Not for MANUFACTURE, or DESIGN INFORMATION. All information contained in this document represents work sponsored by an agency of the U.S. Government. Neither the U.S. Government nor any agency thereof, nor Universities Research Association, Inc., nor any of their employees or officers, makes any warranty, express or implied, or assumes any legal liability or responsibility for the accuracy, completeness, or usefulness of any information, apparatus, product or process disclosed, or represents that its use would not infringe privately owned rights.

UNLESS OTHERWISE SPECIFIED			ORIGINATOR	L.RISTORI	21-NOV-2005
.X		ANGLES	DRAWN	L.SIMMONS	03-FEB-2006
± 0.1MM	±	± .5°	CHECKED	T.NICOL	16-FEB-2006
1. BREAK ALL SHARP EDGES .5MM MAX. 2. DO NOT SCALE DRAWING. 3. DIMENSIONS BASED UPON ASME Y14.5M-1994 4. MAX. ALL MACH. SURFACES 1.6 5. DRAWING UNITS: METRIC			APPROVED	T.NICOL	16-FEB-2006
			USED ON	5520-MD-440375	
			MATERIAL	UNS C10100	

FERMI NATIONAL ACCELERATOR LABORATORY
UNITED STATES DEPARTMENT OF ENERGY

HINS - FRONT END ROOM TEMP CH CAVITY B0744 END WALL DRIFT TUBE

SCALE	DRAWING NUMBER	SHEET	REV
1:1	5520.000-MB-440381	1 OF 1	A

CREATED WITH : Ideas11NXSeries | GROUP: TD/DDCIS-DESIGN-COMPUTING