| REV | DESCRIPTION | DRAWN / APPROVED | DATE / DATE |
|---|---|---|---|
| -- | NEW RELEASE ER#8271 | L. SIMMONS | 06-FEB-2006 |
| A | REMOVED CHAMFER<br>ADDED GROOVE<br>CHANGED DRAWING TITLE -<br>WAS: PROTON DRIVER - FRONT END<br>UPDATED DRAWING ECO #8311 | L. SIMMONS<br>T. NICOL | 31-MAR-2006<br>06-APR-2006 |

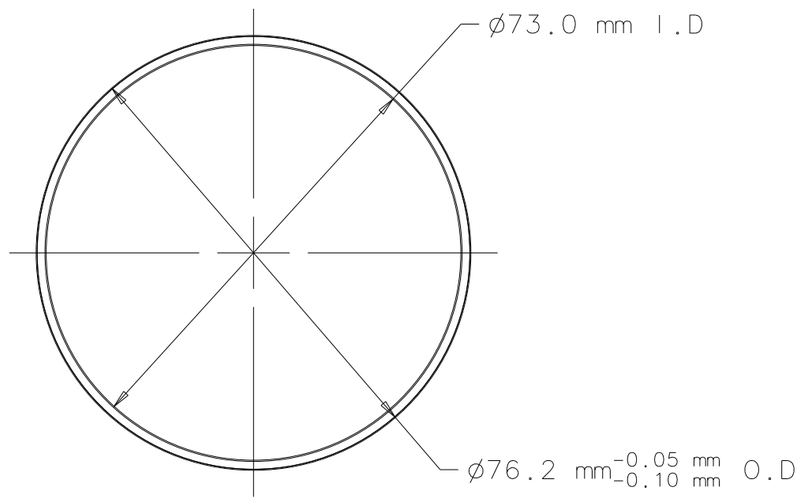


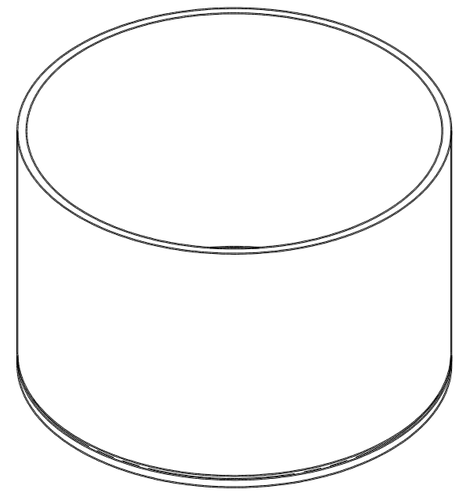

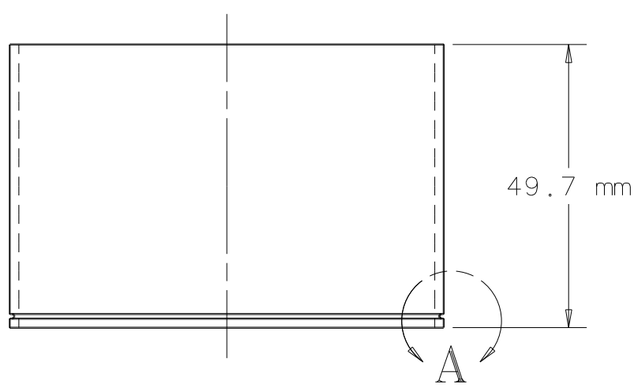


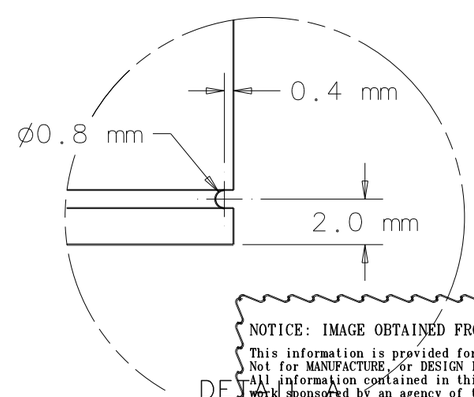


NOTE:

1. CLEAN AND PACKAGE PER FERMILAB SPECIFICATION ES-107222.


**NOTICE: IMAGE OBTAINED FROM FERMILAB WEB SITE**

This information is provided for REFERENCE use only.
Not for MANUFACTURE or DESIGN INFORMATION.
All information contained in this document represents work sponsored by an agency of the U.S. Government. Neither the U.S. Government nor any agency thereof, nor Universities Research Association, Inc., nor any of their employees or officers, makes any warranty, express or implied, or assumes any legal liability or responsibility for the accuracy, completeness, or usefulness of any information, apparatus, product or process disclosed, or represents that its use would not infringe privately owned rights.


| UNLESS OTHERWISE SPECIFIED | | | ORIGINATOR | L.RISTORI | 21-NOV-2005 |
|---|---|---|---|---|---|
| .X | .XX | ANGLES | DRAWN | L.SIMMONS | 03-FEB-2006 |
| ± 0.1MM | ± | ± .5° | CHECKED | T.NICOL | 16-FEB-2006 |
| | | | APPROVED | T.NICOL | 16-FEB-2006 |

1. BREAK ALL SHARP EDGES .5MM MAX.
2. DO NOT SCALE DRAWING.
3. DIMENSIONS BASED UPON ASME Y14.5M-1994
4. MAX. ALL MACH. SURFACES 3.2
5. DRAWING UNITS: METRIC

USED ON: 5520-MB-440374

MATERIAL: S30400

**FERMI NATIONAL ACCELERATOR LABORATORY**
UNITED STATES DEPARTMENT OF ENERGY

# HINS - FRONT END ROOM TEMP CH CAVITY B0744 VACUUM PORT TUBE

| SCALE | DRAWING NUMBER | SHEET | REV |
|---|---|---|---|
| 1:1 | 5520.000-MB-440388 | 1 OF 1 | A |

CREATED WITH : Ideas11NXSeries | GROUP: TD/DDCIS-DESIGN-COMPUTING