| REV | DESCRIPTION | DRAWN | DATE |
|---|---|---|---|
| | | APPROVED | DATE |
| -- | NEW RELEASE E.R.# 8271 | L. SIMMONS | 06-FEB-2006 |
| A | CHANGED ANGLE. WAS: 17.0° NOW: 17.4°<br>CHANGED RADIUS. WAS: 182.8 NOW: 182.0<br>CHANGED DIM. WAS: 172.8 NOW: 172.0<br>CHANGED DRAWING TITLE - WAS: PROTON DRIVER - FRONT END<br>UPDATED DRAWING ECO #8311 | L. SIMMONS | 31-MAR-2006 |
| | | T. NICOL | 06-APR-2006 |

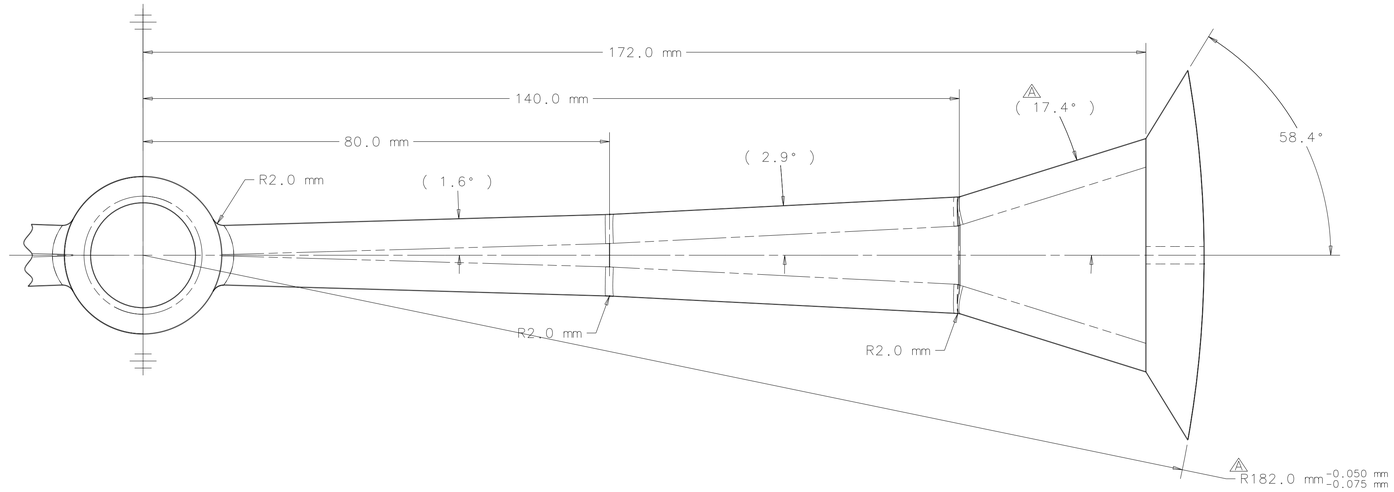


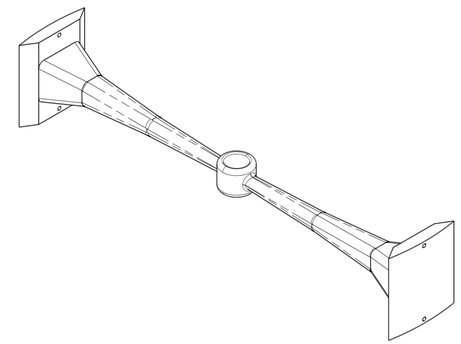

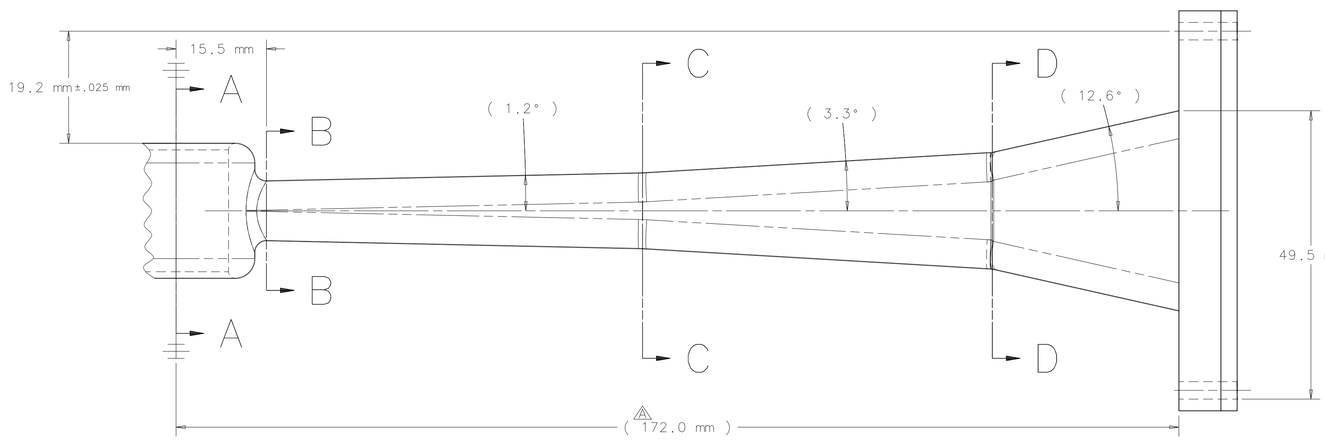


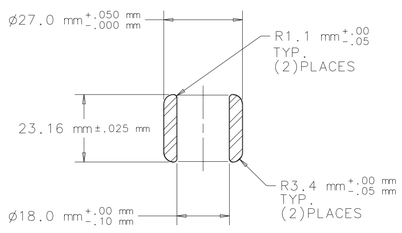


SECTION A-A
SCALE = 1:1

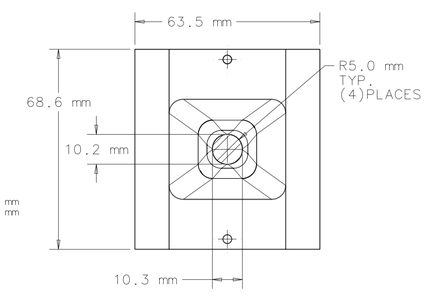


SECTION B-B
SCALE = 1:1

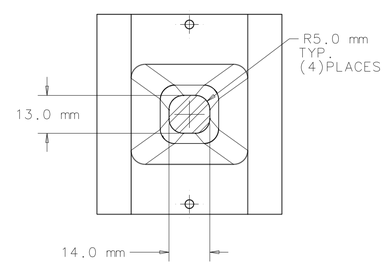


SECTION C-C
SCALE = 1:1

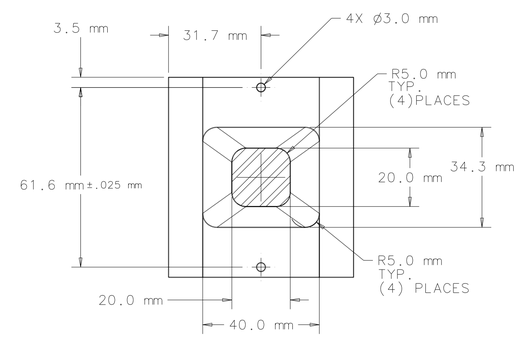


SECTION D-D
SCALE = 1:1

NOTE:

1. CLEAN AND PACKAGE PER FERMILAB SPECIFICATION ES-107223.

| UNLESS OTHERWISE SPECIFIED | | | ORIGINATOR | L.RISTORI | 21-NOV-2005 |
|---|---|---|---|---|---|
| .X | .XX | ANGLES | DRAWN | L.SIMMONS | 03-FEB-2006 |
| ± 0.1MM | ± | ± .5° | CHECKED | T.NICOL | 16-FEB-2006 |
| 1. BREAK ALL SHARP EDGES 0.5MM MAX.<br>2. DO NOT SCALE DRAWING.<br>3. DIMENSIONS BASED UPON ASME Y14.5M-1994<br>4. MAX. ALL MACH. SURFACES 1.6<br>5. DRAWING UNITS: METRIC | | | APPROVED | T.NICOL | 16-FEB-2006 |
| | | | USED ON | 5520-ME-440374 | |
| | | | MATERIAL | UNS C10100 | |

FERMI NATIONAL ACCELERATOR LABORATORY
UNITED STATES DEPARTMENT OF ENERGY

NOTICE: IMAGE OBTAINED FROM FERMILAB WEB SITE

This information is provided for REFERENCE use only. Not for MANUFACTURE, or DESIGN INFORMATION. All information contained in this document represents work sponsored by an agency of the U.S. Government. Neither the U.S. Government nor any agency thereof, nor Universities Research Association, Inc., nor any of their employees or officers, makes any warranty, express or implied, or assumes any legal liability or responsibility for the accuracy, completeness, or usefulness of any information, apparatus, product or process disclosed, or represents that its use would not infringe privately owned rights.

# HINS - FRONT END ROOM TEMP CH CAVITY B0744 SPOKE - B

| SCALE | DRAWING NUMBER | SHEET | REV |
|---|---|---|---|
| 2:1 | 5520.000-MD-440392 | 1 OF 1 | A |

CREATED WITH : Ideas11NXSeries | GROUP: TD/DDCIS-DESIGN-COMPUTING