REV	DESCRIPTION	DRAWN / APPROVED	DATE / DATE
	ER NO. 8467		
A	406.4 WAS 393.7 & REV NOTE #2	S.L. MEREDITH	10-18-06
	ECO NO. 8558	T. PAGE	10-20-06

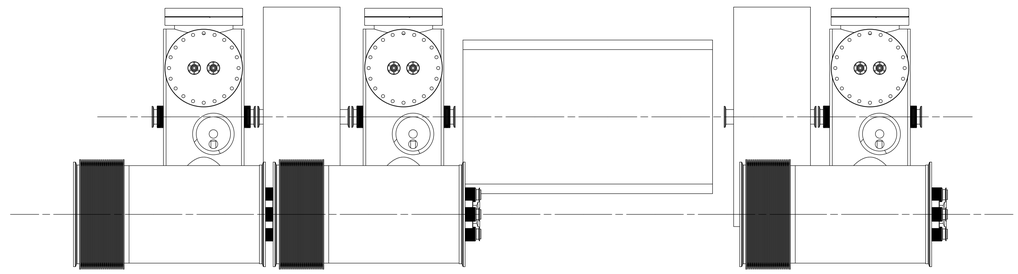

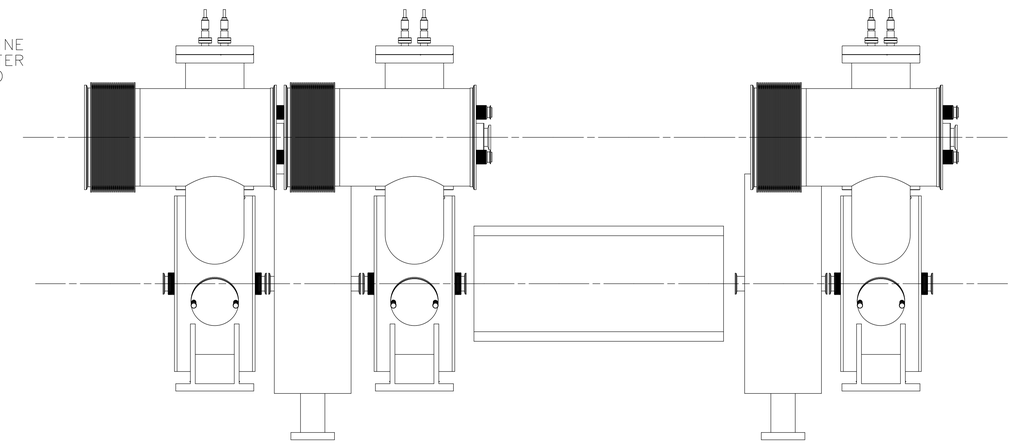

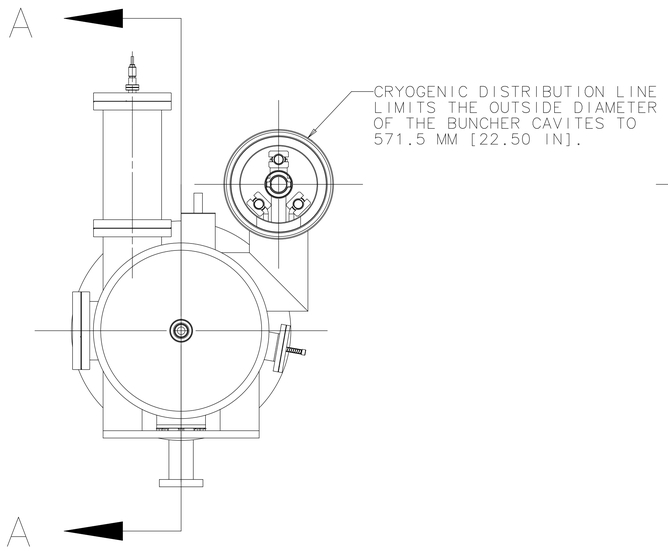

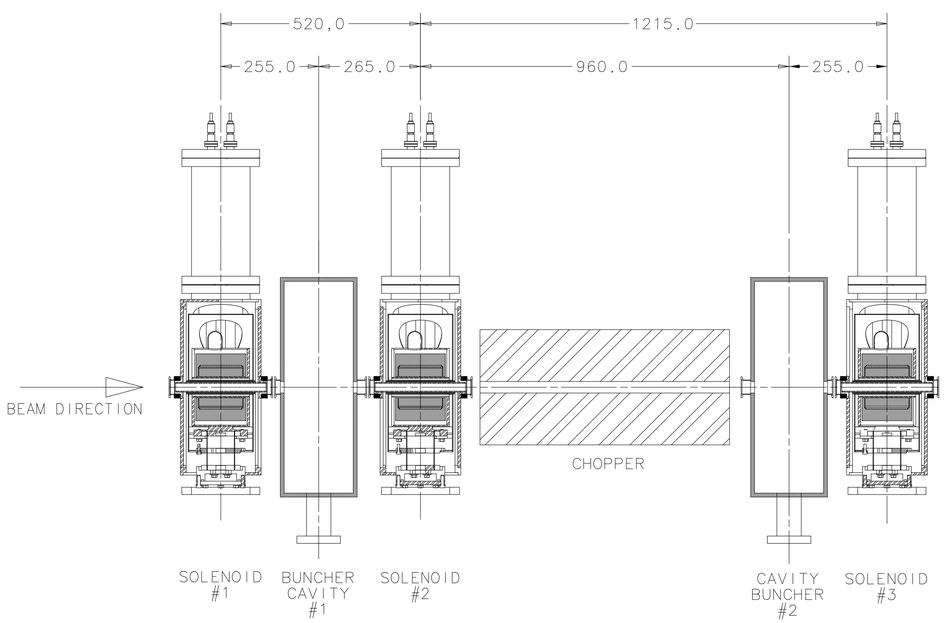

SECTION: A–A

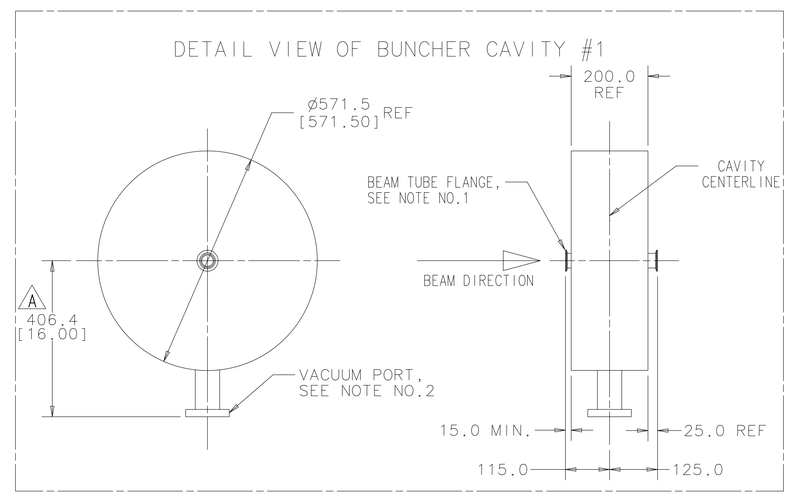

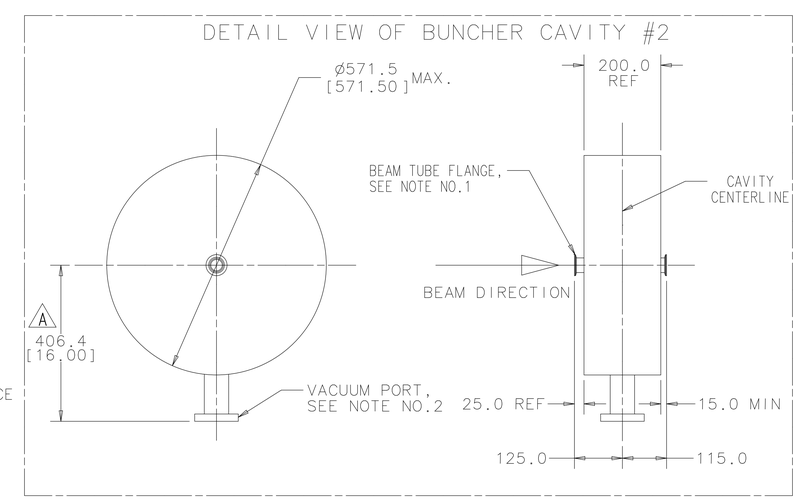

NOTES:

1. BEAM TUBE FLANGE SPECIFICATION: NOR-CAL NW 40 OR EQUIVALENT; MUST BE COMPATIBLE WITH EVAC ALUMINUM SEALS.
2. (A) VACUUM PORT: 2.5" O.D. STAINLESS STEEL TUBE; VACUUM FLANGE: 4.5" CONFLAT, NON-ROTATABLE, CLEARANCE HOLES, MDC PART NUMBER 110021 OR EQUIVALENT.
3. CAVITY MOUNTING FEATURES TO BE SPECIFIED BY VENDOR, APPROVED BY FNAL.

UNLESS OTHERWISE SPECIFIED			ORIGINATOR	T.PAGE	10-JUL-2006
.X	.XX	ANGLES	DRAWN	S.MEREDITH	10-JUL-2006
± .5	± .13	± .5°	CHECKED	T.PAGE	12-JUL-2006
1. BREAK ALL SHARP EDGES MAX. 2. DO NOT SCALE DRAWING. 3. DIMENSIONS BASED UPON ASME Y14.5M-1994 4. MAX. ALL MACH. SURFACES ✓ 5. DRAWING UNITS: U.S. INCH			APPROVED	T.PAGE	12-JUL-2006
			USED ON		
			MATERIAL		

FERMI NATIONAL ACCELERATOR LABORATORY
UNITED STATES DEPARTMENT OF ENERGY

HINS - FRONT END
MEBT SECTION
BUNCHER CAVITY DESIGN ENVOLOPES

SCALE	DRAWING NUMBER	SHEET	REV
1:6	5520.000-ME-441709	1 OF 1	A

CREATED WITH : Ideas12NXSeries GROUP: TD/DDCIS-DESIGN-COMPUTING